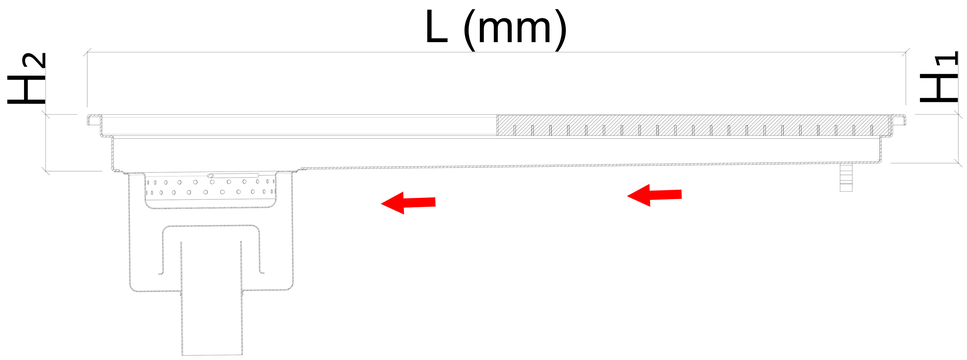

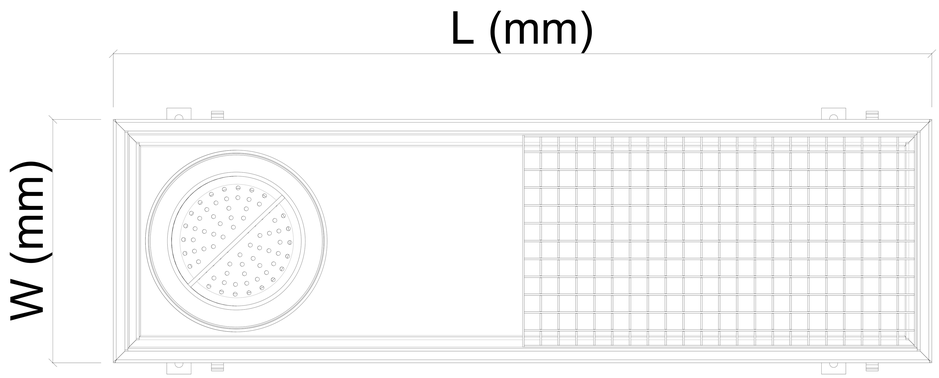

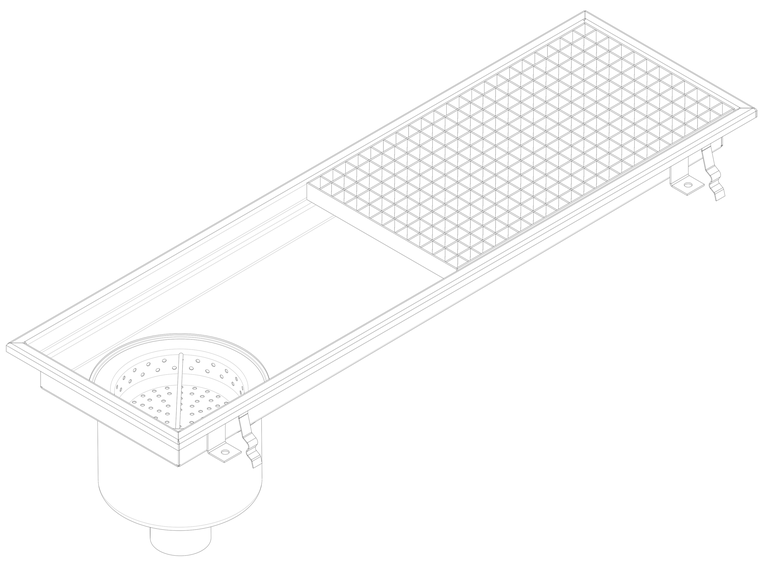

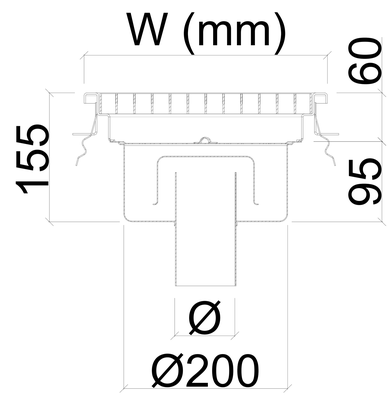

LOW TYPE					
MODEL	W x L	H1-H2	Ø		
			DN50	DN70	DN100
TKAG-310	300 x 1009	50-60	Ø50	Ø75	Ø110
TKAG-312	300 x 1271				
TKAG-314	300 x 1496				
TKAG-317	300 x 1757				
TKAG-319	300 x 1981				
TKAG-323	300 x 2244				
TKAG-324	300 x 2468				
Max. Flow Rate lt / min			50	50	70
Waterseal Height			50mm		

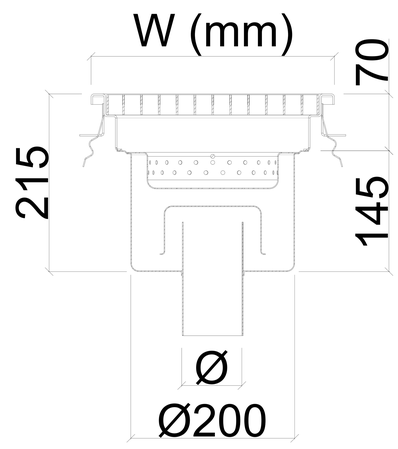

DEEP TYPE					
MODEL	W x L	H1-H2	Ø		
			DN50	DN70	DN100
TKAG-310	300 x 1009	60-70	Ø50	Ø75	Ø110
TKAG-312	300 x 1271				
TKAG-314	300 x 1496				
TKAG-317	300 x 1757				
TKAG-319	300 x 1981				
TKAG-323	300 x 2244				
TKAG-324	300 x 2468				
Max. Flow Rate lt / min			50	50	70
Waterseal Height			60mm		

APPLICATION DRAWING

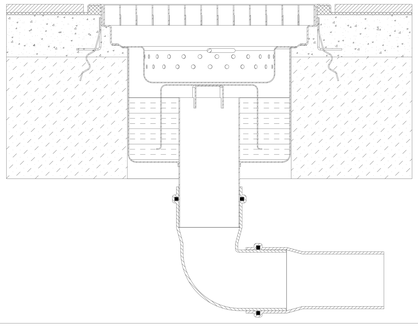

OPTIONAL

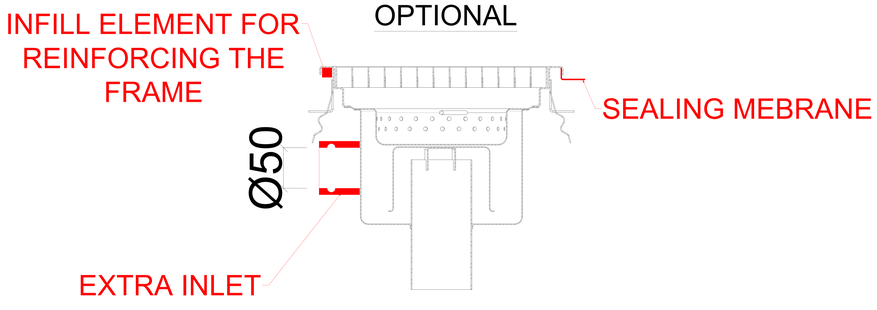

FENICROM®